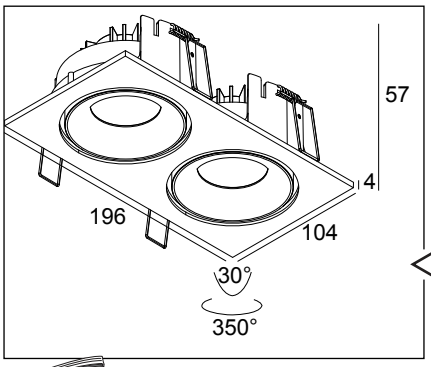

REO 2 S OK S1

DEEL
PARTIE
TEIL
PART
PARTE
PARTE

A

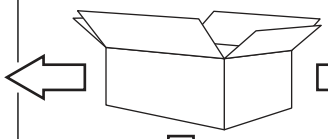

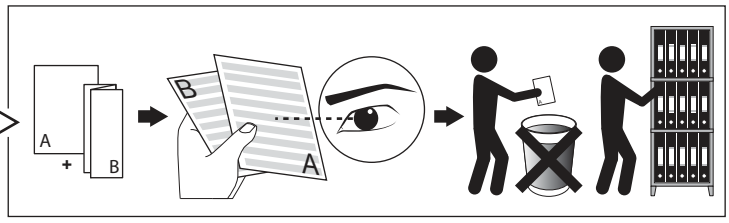

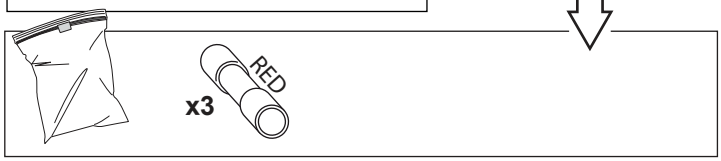

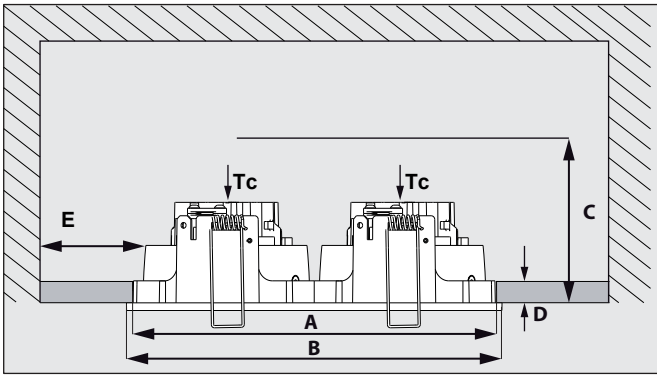

	mm
A	190 x 98
B	196
C	70
D	MAX. 30
E	≥50

Tc = 80°C max

I_o	350mA	OR	500mA
P_o	2x 7,1W		2x10,4W
U_f Typical	20,2V-DC		20,7V-DC

IP20
IP23

Beschermd tegen vaste voorwerpen die groter zijn dan 12 mm
Protégé contre les objets solides de plus de 12 mm
Geschützt gegen Festkörper größer als 12 mm
Protected against solid objects greater than 12 mm
Protegido contra objetos sólidos superiores a 12 mm
Protetto contro oggetti solidi più grandi di 12 mm

Beschermd tegen vaste voorwerpen die groter zijn dan 12 mm - Beschermd tegen sproeiwater
Protégé contre les objets solides de plus de 12 mm - Protégé contre les pulvérisations d'eau
Geschützt gegen Festkörper größer als 12 mm - Geschützt gegen Sprühwasser
Protected against solid objects greater than 12 mm - Protected against spraying water
Protegido contra objetos sólidos superiores a 12 mm - Protegido contra agua pulverizada
Protetto contro oggetti solidi più grandi di 12 mm - protetto contro gli spruzzi d' acqua

Enkel geschikt voor toestellen op zeer lage spanning (minder dan 50 V AC)
Convient uniquement pour les produits à très basse tension (moins de 50 V AC)
Geeignet für Güter mit sehr niedriger Spannung (unter 50 V AC)
Only suited for goods at very low voltage (below 50 V AC)
Se recomieda únicamente para aquellos productos de tensión muy baja (menos de 50 V AC)
Vale unicamente per i prodotti a tensione molto bassa (inferiore a 50 V AC)

Toestel niet geschikt om te worden afgedekt met thermische isolatie.
Luminaires non appropriées pour recouvrement d'un matériau isolant thermique.
Das Gerät/Die Leuchte darf nicht abgedeckt werden mit thermischer Isolation.
Luminaire not suitable for covering with insulating material.
Luminaria no apta para cubrir con material aislante.
Apparecchio non adatto per essere coperto da materiale isolante.

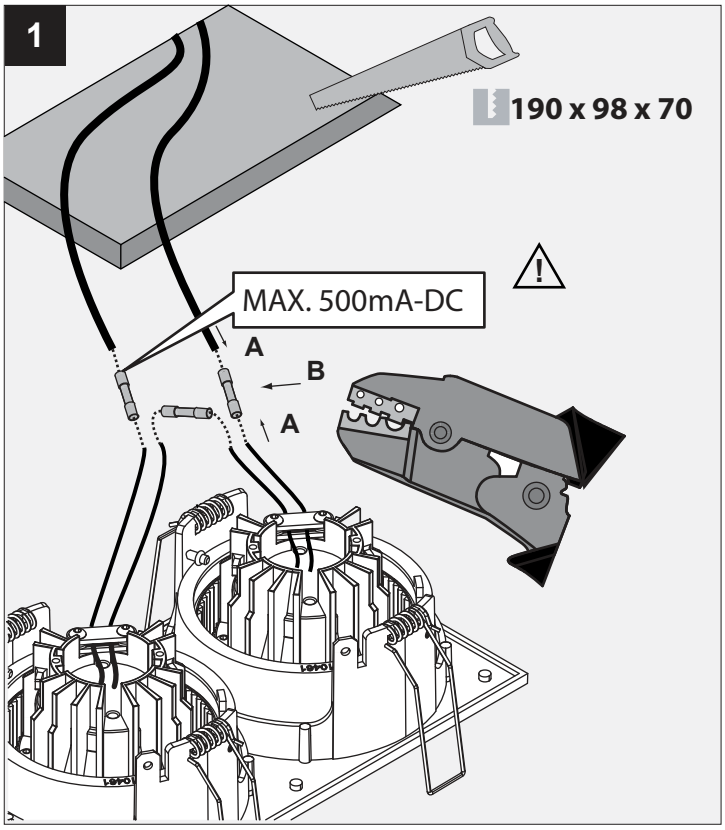

ELECTRICAL CONNECTION

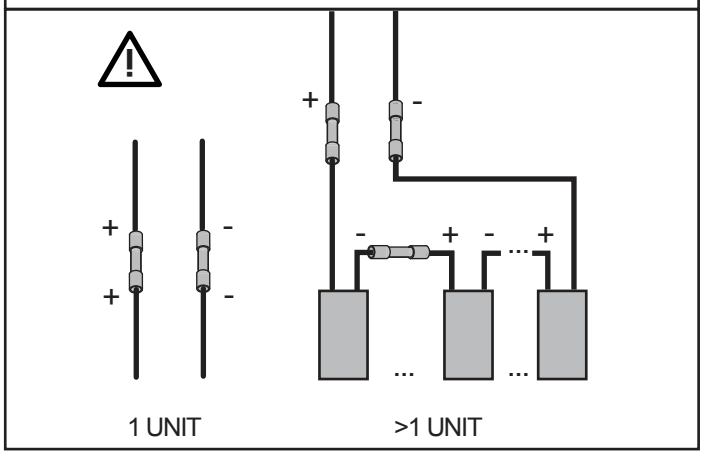

2

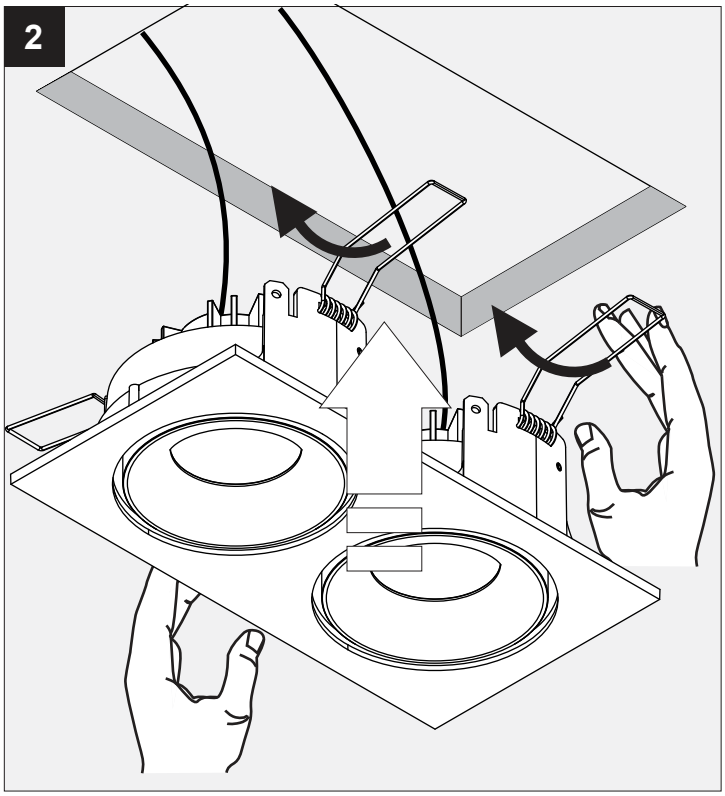

3

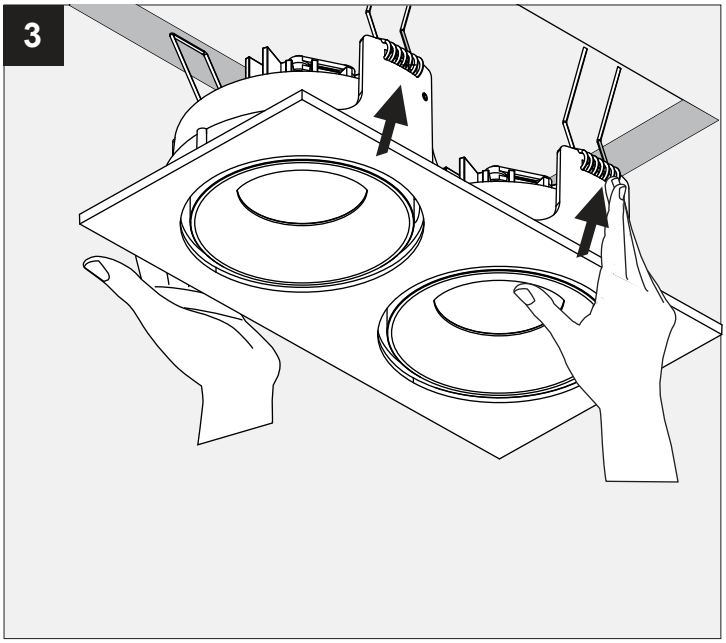

4

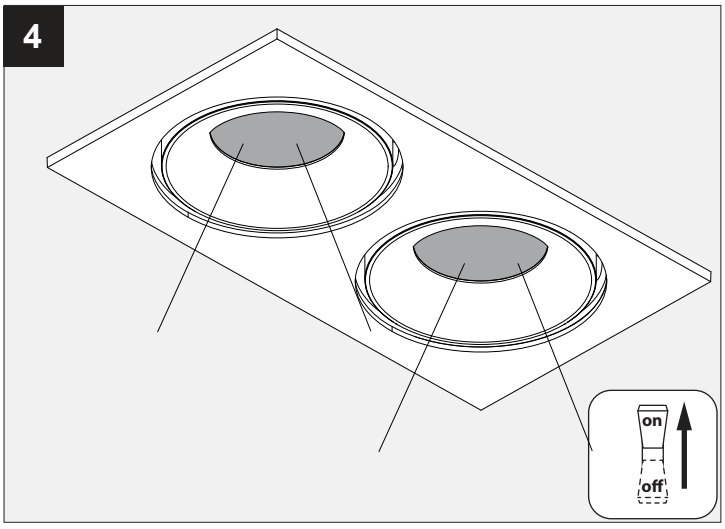

DO NOT TOUCH OR CLEAN THE LED ARRAY!

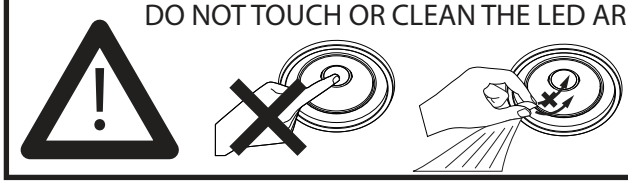

- Use only power supplies that are certified according to the applicable IEC or UL safety standards.
- Use only SELV power supplies.
- Check the ratings of the power supply with those of the luminaire.
  The maximum current rating must be taken into account.
  The indicated typical voltage must not be used to select a constant voltage power supply but is indented to used to select a constant current power supply that is able to cover that typical voltage.
- Take appropriate ESD measures. Avoid touching bare conductors.
- Leds or led luminaires that require a current controlled power supply must never be connected in parallel.
- Leds can be damaged by the contact with certain chemicals or chemical gasses.
  Therefore led domes or led engines should never be cleaned with chemical substances.
  The following substances have proven to have a negative influence on the performance and must not be used in the direct environment of a led luminaire.
  - Methyl acetate or ethyl acetate (i.e., nail polish remover)
  - Cyanoacrylates (i.e., "Superglue")
  - Glycol ethers (including Radio Shack® Precision Electronics Cleaner - dipropylene glycol monomethyl ether)
  - Formaldehyde or butadiene (including Ashland PLIOBOND® adhesive)
  - Dymax 984-LVUF conformal coating
  - Loctite Sumo Glue
  - Gorilla Glue
  - Bleach, Bleach-containing cleaners, sprays
  - Loctite 384 adhesive
  - Loctite 7387 activator
  - Loctite 242 threadlocker
- Remove insulation and/or provide sufficient ventilation so that the indicated max Tc is not surpassed.
- Leds are susceptible to switching transients. Therefore switching must be done in the primary circuit of the power supply.
- DELTA LIGHT recommands to use the power supplies that are indicated in the Lighting Bible.
- Respect polarity
- Don't test LED luminaires one by one on a powersupply that is switched on.

De verlichtingsbron van dit verlichtingstoestel zal enkel door de fabrikant of door de fabrikant aangestelde installateur vervangen worden.

La source lumière de cet appareil ne sera remplacée que par l'entreprise ou par un agent reconnu.

Das enthaltene Leuchtmittel sollte nur durch entsprechendes Fachpersonal ersetzt werden.

The light source contained in this luminaire shall only be replaced by the manufacturer or his service agent.

La fuente de iluminación que tiene esta luminaria sólo puede remplazarse por el fabricante o por un instalador autorizado.

La sorgente luminosa incorporata in questo apparecchio può essere sostituita solo dal produt tore, da un suo centro assistenza oppure da una persona in possesso della necessaria abilitazione.

ATTENTION
OBSERVE PRECOUSIONS FOR HANDLING ELECTROSTATIC DISCHARGE SENSITIVE DEVICES
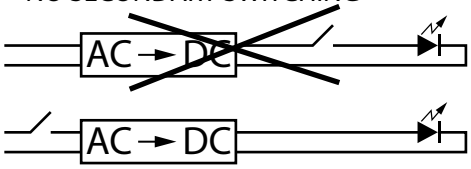
NO SECONDARY SWITCHING