Sulfer LED 2700K/3000K Tre dim GI

132700X_132701XX

MOUNT FIXATION PLATE ON THE SURFACE
BY USING SCREWS (NOT INCLUDED)

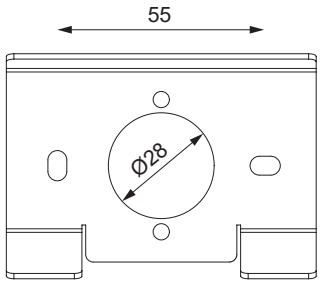

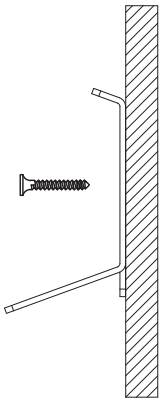

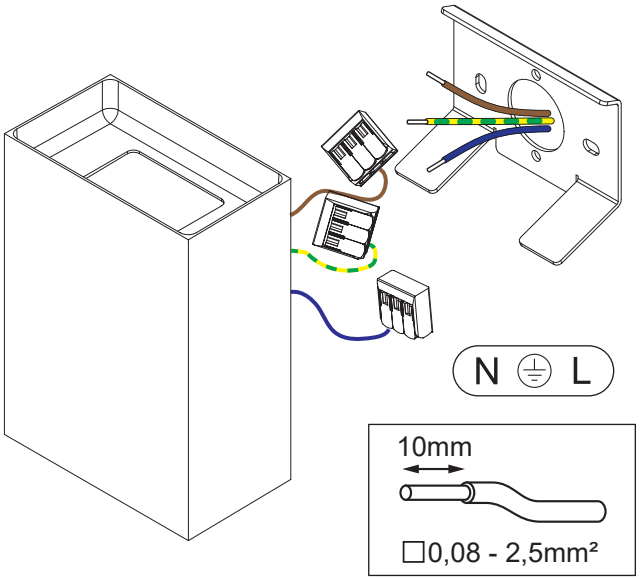

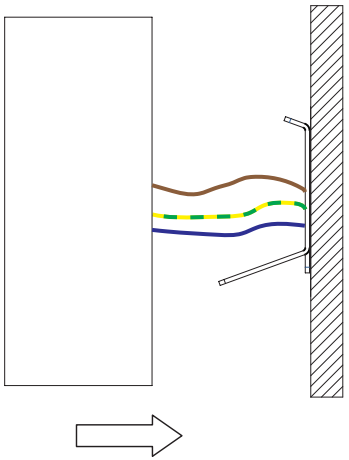

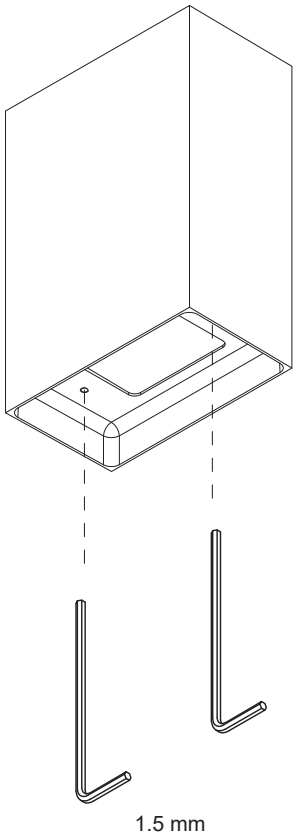

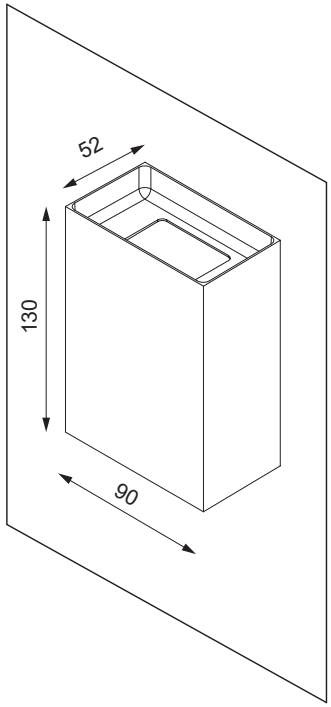

The light source contained in this luminaire shall only be replaced by the manufacturer or his service agent or a similar qualified person

Replace protective shield when broken. The luminaire shall only be used complete with its protective shield. Reference number: 1012267

CAN BE USED WITH
132710XX Sulfer set small beam plates
132711XX Sulfer set medium beam plates

R,C 220-230V 50-60Hz

V2 - 23/05/2018