rond

potential-free push button
installation instruction

1

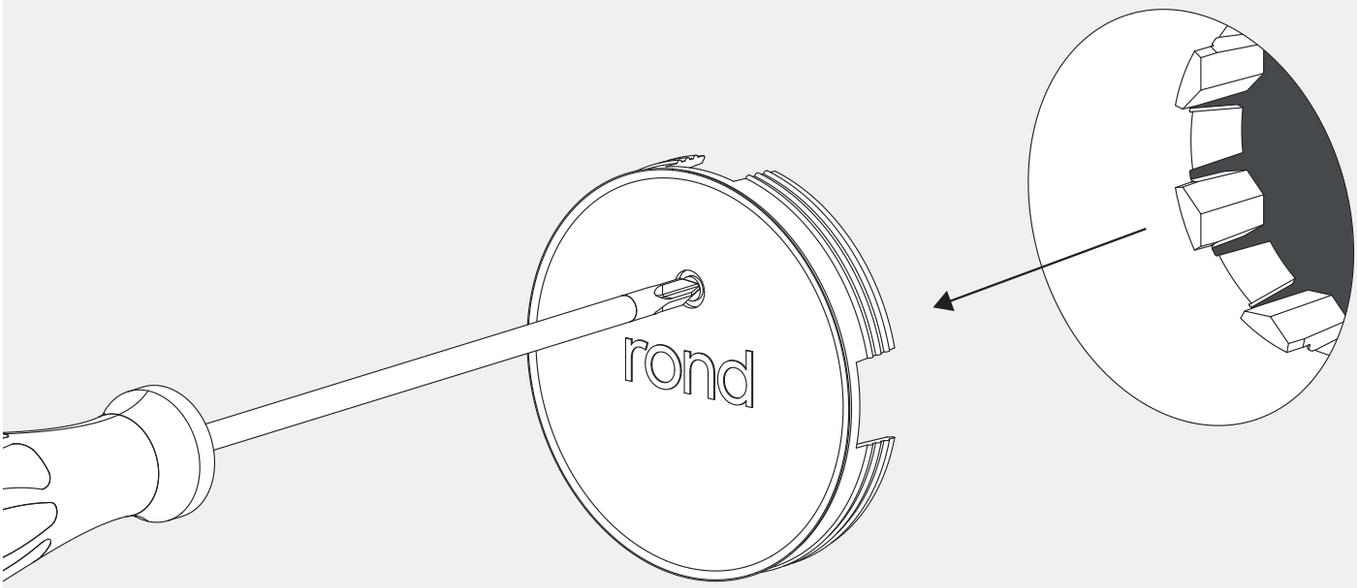

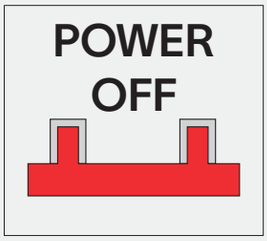

2

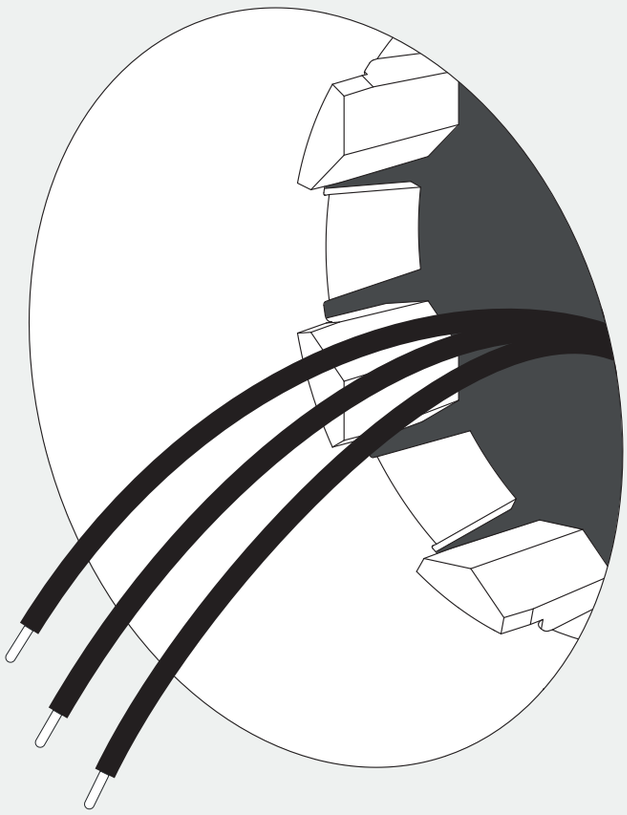

3

two-fold

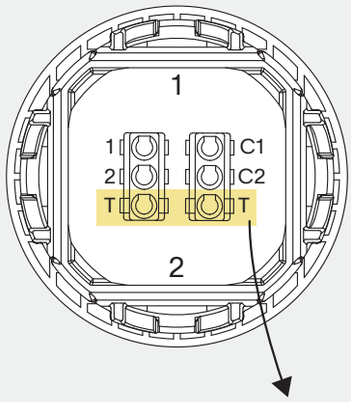

four-fold

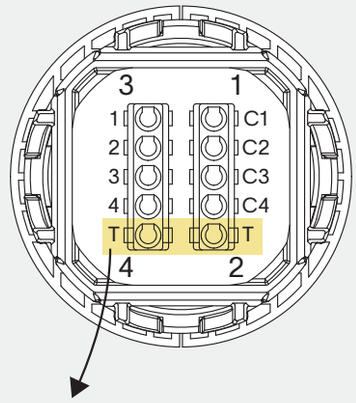

NTC temperature sensor

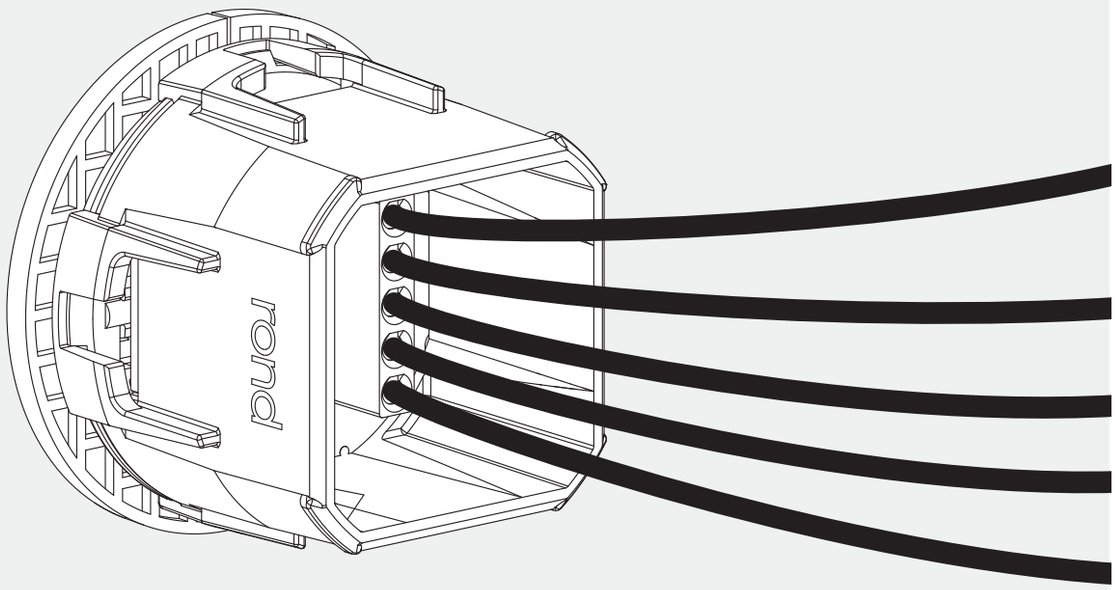

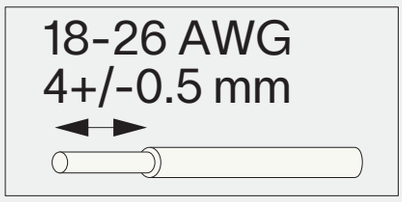

electric scheme

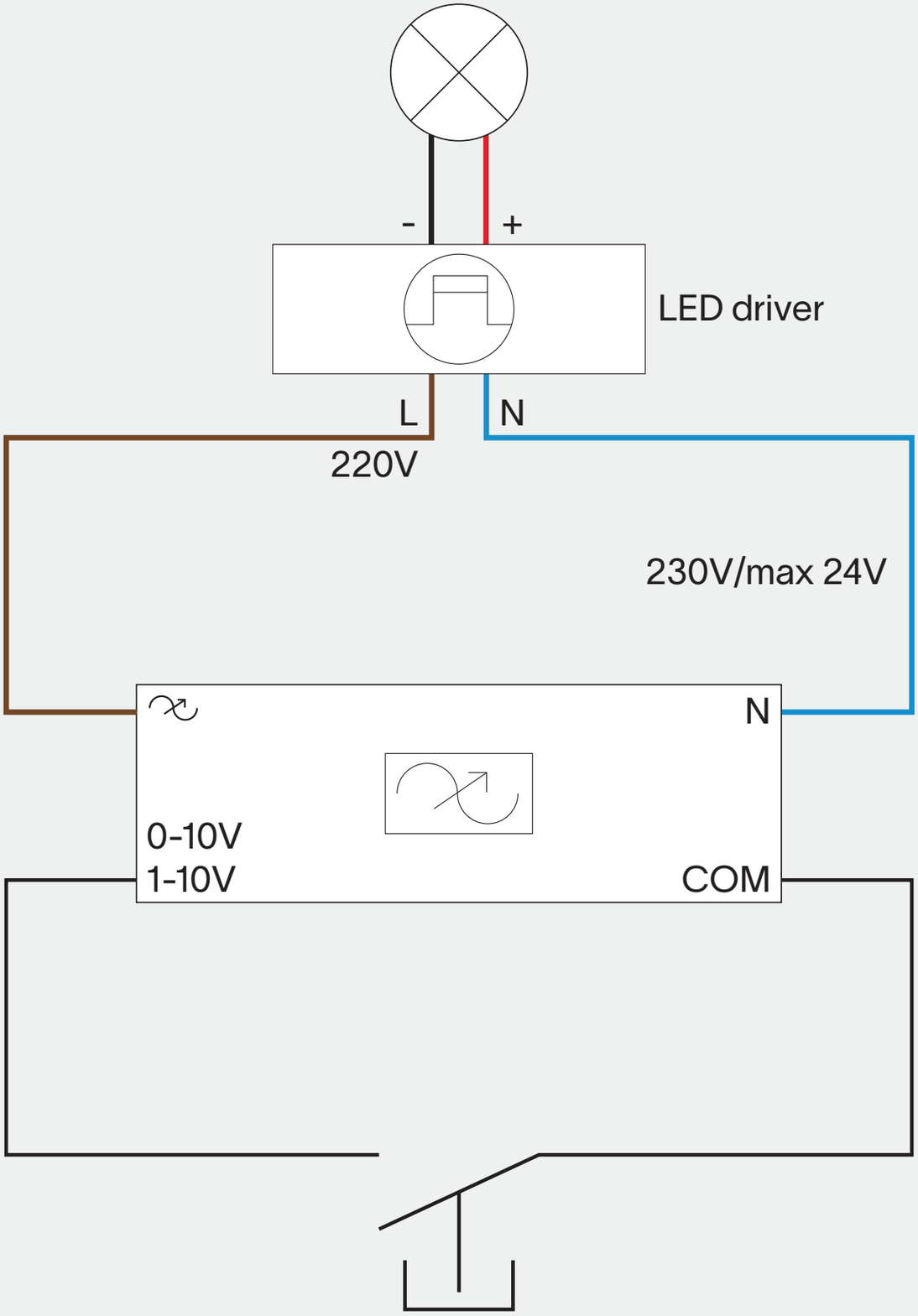

pushbutton rond - 1 input

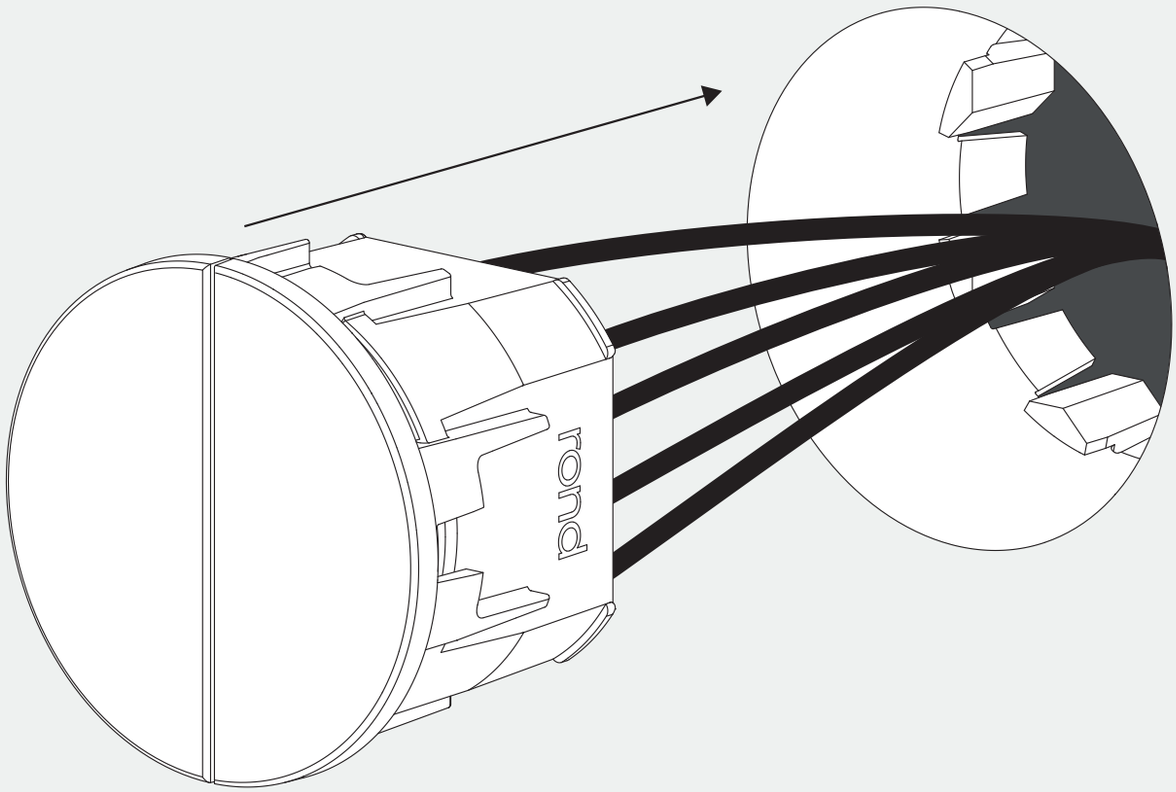

5

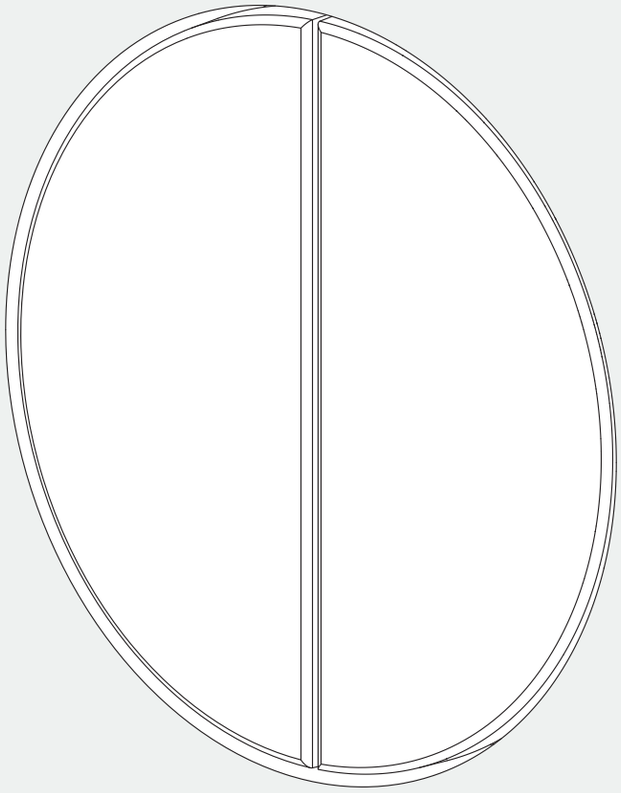

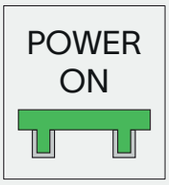

for small trim

6

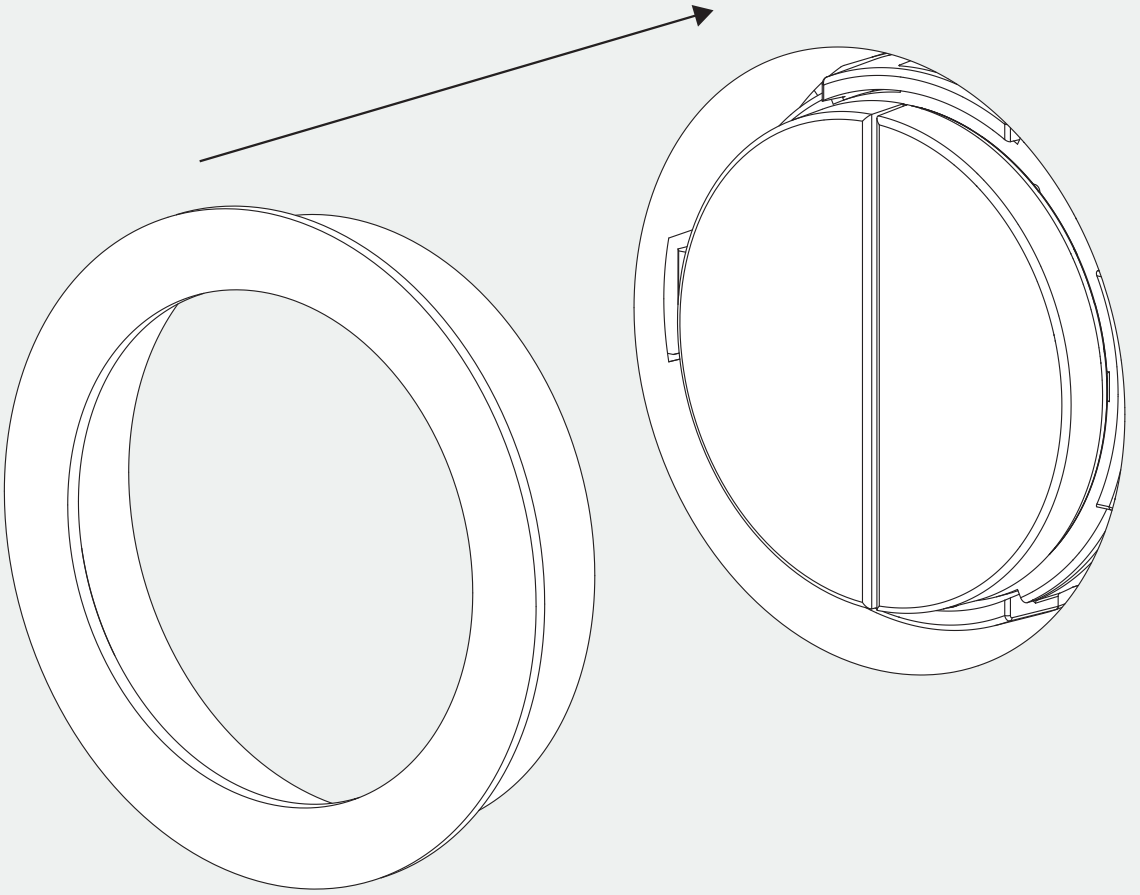

7

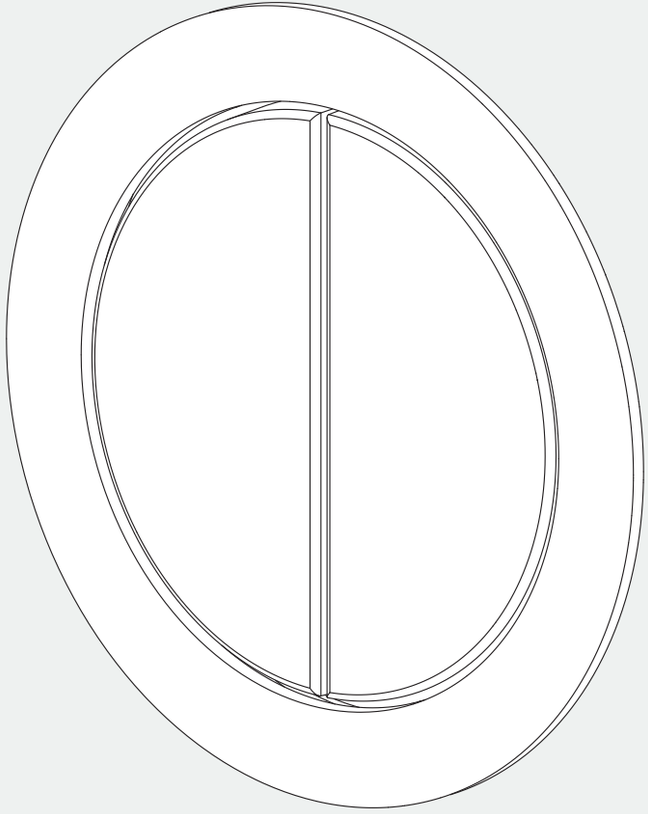

for removal

8

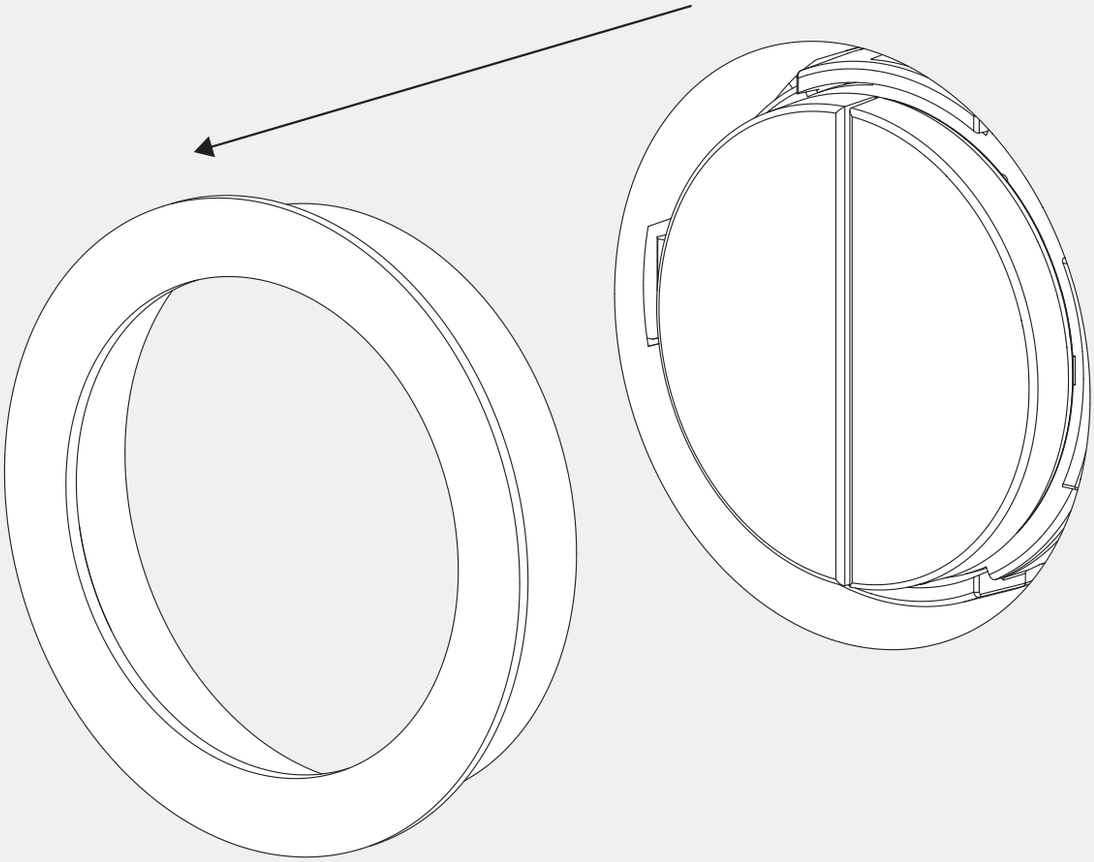

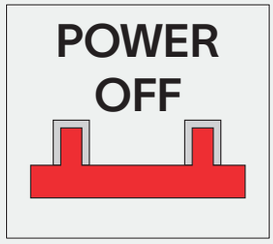

9

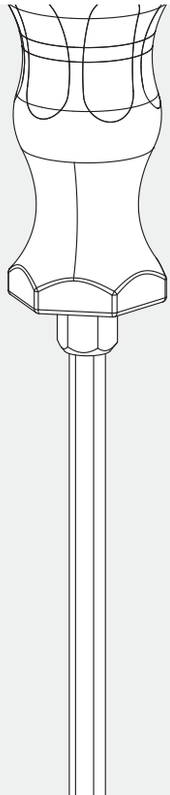

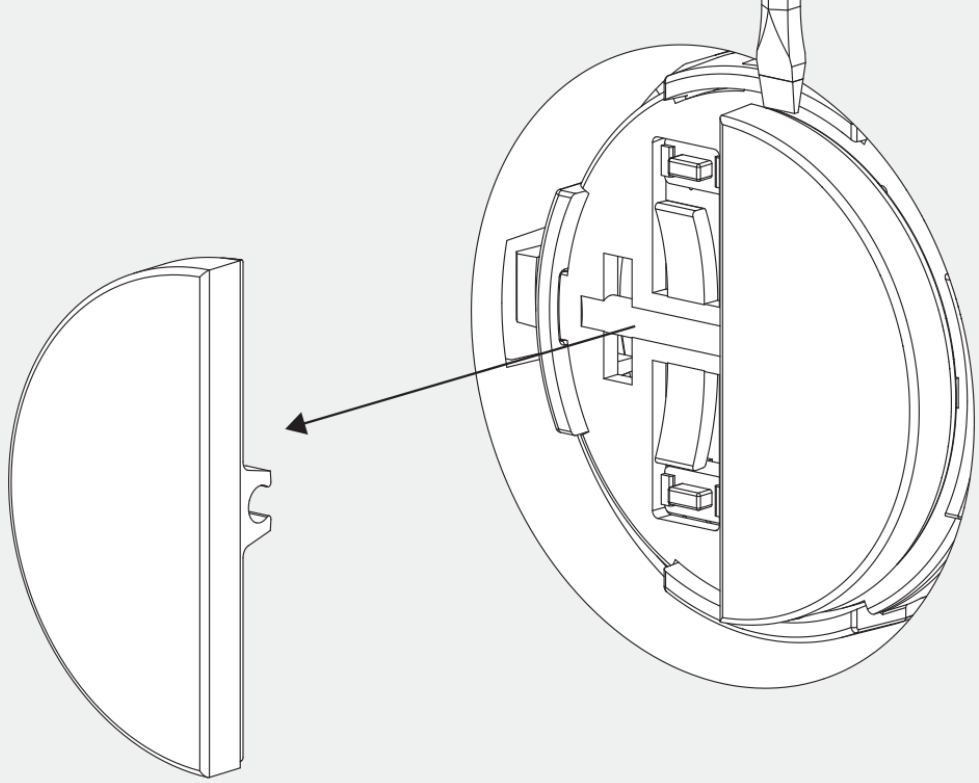

10

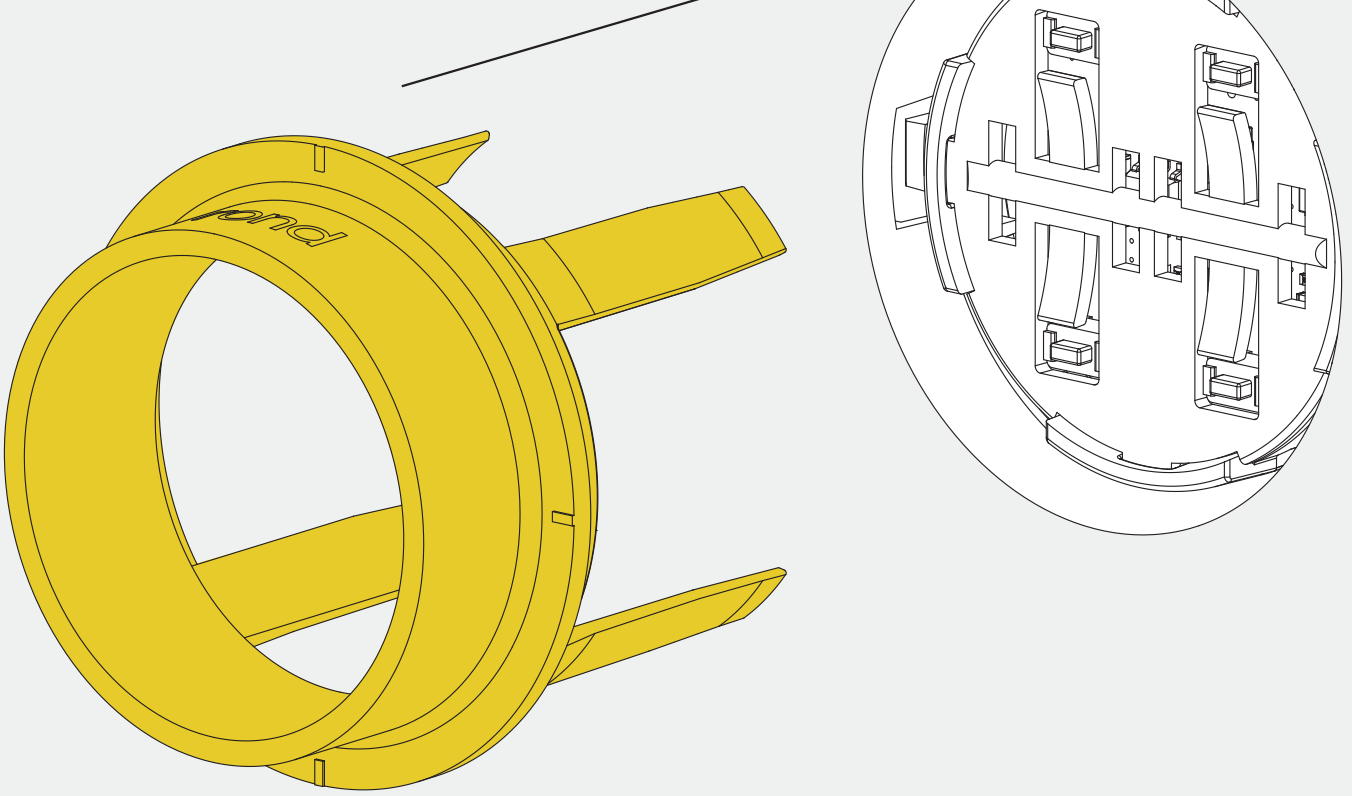

11

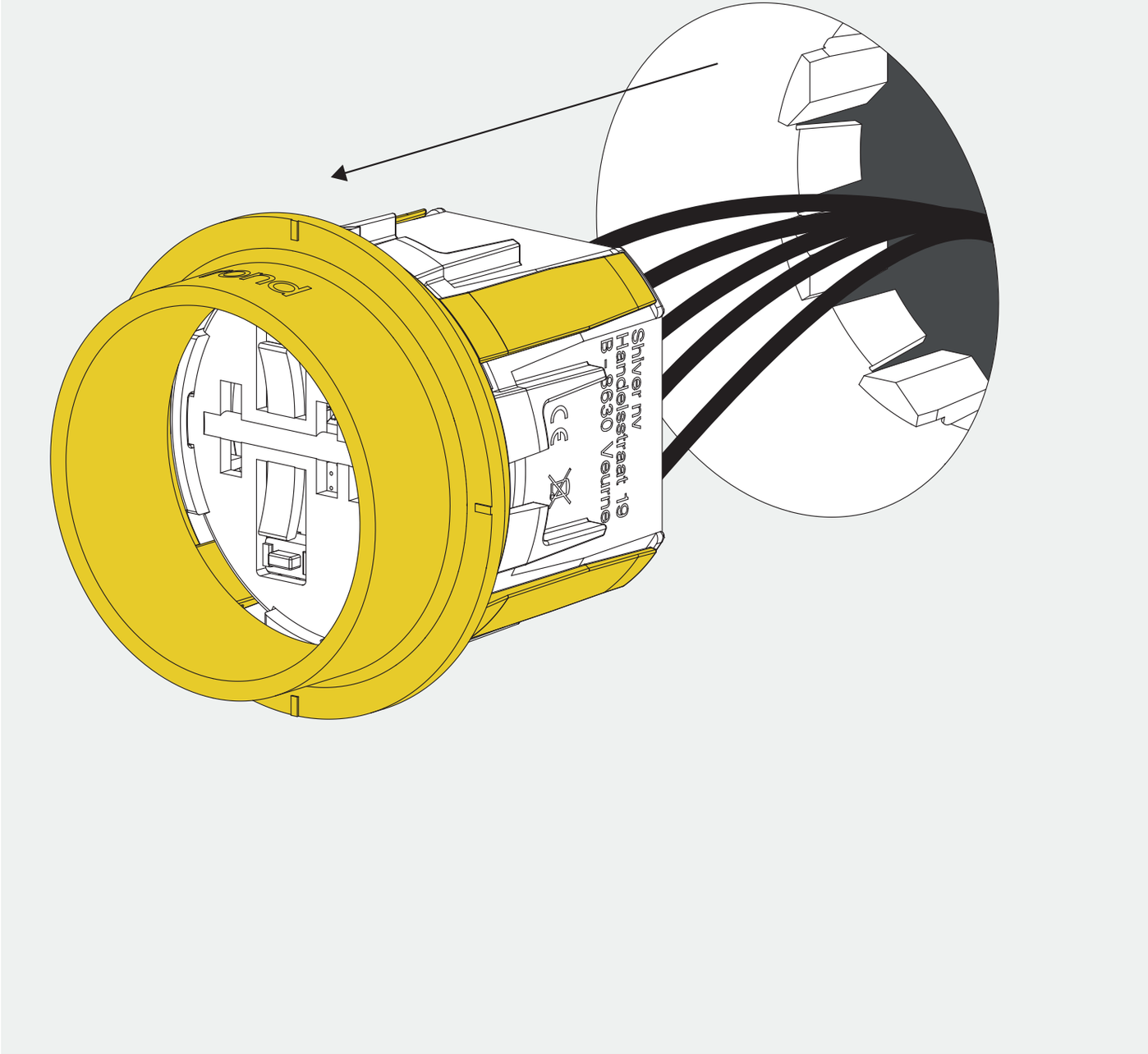

thank you for choosing rond

rond.io

Shiver NV - Handelsstraat 19 - 8630 Veurne - Belgium

Installation must be done by skilled professionals only and instructions must be followed at all times. Warranty will not apply in case of wrongful use of if unskilled personnel attempts to repair a product.